# Hy-Lok RP Series

## Rising Plug Valves

Catalog No. H-RP100
Feb. 2015

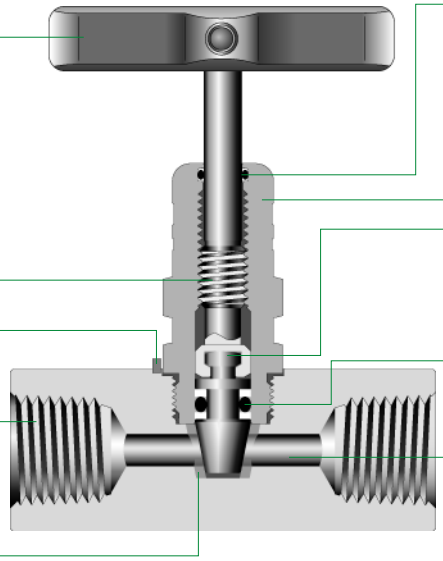

**Robust Bar Handle**
- sintered stainless steel handle.

**Stem Thread**
- is to prevent particle build-up and for long life.
- is above the packing to prevent fluid contamination.

**Bonnet Loking Plate**
- ensures no disassembly.

**Variety of End Connections**
- include male/female NPT and Male/Female ISO/BSP. Female Hy-Lok Tube Fittings.

**POM Cone Seat**
- is standard for easier replacement and PEEK is also available as option.

**Internal Seal**
- prevent ingress of foreign materials into the actuating threads.

**Panel Mount**
- is available as option.

**Non - Rotating Stem Tip**
- ensures positive sealing minimizing seat wear-out.

**FKM O - Ring with Back - up Ring**
- is Standard.

**Orifice in Straight Flow Path**
- ensures max Cv.

# Features

- **Pressure rating** up to 6000psig @ 100°F (38°C)
- **Gauge port** available as option
- **SS316 body** as standard
- **Sour gas service** available.
- **100% factory tested**

## Materials of Construction

| Description | Material / ASTM Specification |
|---|---|
| Body | SS316 / A479 or A276 |
| Bonnet | |
| Stem | |
| Tip | |
| Seat | POM Standard |
| Seal | FKM Standard |
| Handle Set | Stainless Steel |
| Locking Plate | Stainless Steel |

## Temperature and Pressure Ratings

| Seat Materials | Temperature Rating | Pressure Rating @ 100°F (38°C) | Pressure Rating @ Max Temperature |
|---|---|---|---|
| POM (standard) | -20°F～250°F (-29°C～121°C) | 6,000 psig (413 bar) | 1,000 psig @ 250°F(121°C) |
| PEEK (optional) | -20°F～400°F (-29°C～204°C) | 6,000 psig (413 bar) | 1,000 psig @ 400°F(204°C) |

## Spare Seat

- available for maintenance as below

| Part No. | Seat Materials | Q'ty / Pack |
|---|---|---|
| RPV - ✻ - DS | POM Seat | 1 pc |
| RPV - ✻ - PK | PEEK Seat | 1 pc |

**Note** "✻" for end connection and size designator
e.g. RPV-MF8N-PK (See Ordering Information)

**HY-LOK CORPORATION**

© 1998, 1999, 2002, 2015 HY-LOK CORPORATION All rights reserved

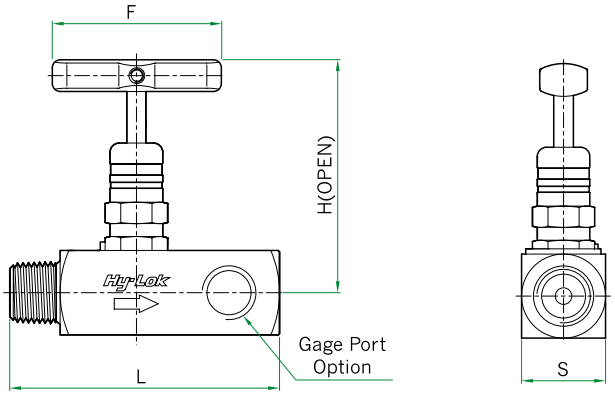


## Table of Dimensions

| Basic Part No. | | Orifice Hole | Cv | End Connections | | Dimensions | | | |
|---|---|---|---|---|---|---|---|---|---|
| | | | | Inlet | Outlet | L | S | F | H |
| RPV | F -4N | 6.3 (0.25) | 1.77 | 1/4" Female NPT | | 62.0 (2.44) | 25.4 (1.00) | 60 (2.36) | 95.4 (3.75) |
| | MF-4N | | | 1/4" Male NPT | 1/4" Female NPT | 74.0 (2.91) | | | |
| | F -8N | | | 1/2" Female NPT | | 84.0 (3.31) | 32.0 (1.26) | | 97.5 (3.34) |
| | MF-8N | | | 1/2" Male NPT | 1/2" Female NPT | 90.0 (3.54) | | | |
| | MF-12N8N | | | 3/4" Male NPT | 1/2" Female NPT | | | | |

All dimensions in millimeters.

## Ordering Information

RPV MF G8N 12N 8N PK P S316

**Valve Type Designator**

**Gauge Port Designator** *
- Nil : Without(Standard)
- G4N : 1/4" NPT
- G8N : 1/2" NPT

**Seat Material Designator** *
- Nil : POM (Standard)
- PK : PEEK

**Body Material Designator**
- S316 : 316 Stainless Steel

**End Connection Designator**
- F : Both Ends Female Pipe Thread
- MF: Male Pipe Thread & Female Pipe Thread

**Size Designator**
Inlet / Outlet

**Panel Mounting Designator** *
- Nil : Without(Standard)
- P : With

- NPT (ISO/BSP)

| Thread(in.) | 1/4 | 1/2 | 3/4 |
|---|---|---|---|
| Designator | 4N(R) | 8N(R) | 12N(R) |

**Note** * : No designator is reqired for standard.
e.g. RPV MF-12N 8N-S316

### *SAFETY in VALVE SELECTION*

Proper installation, materials compatibility, operation and maintenance of these valves are the responsibility of the user. The total system design must be taken into consideration to ensure optimal performance and safety.